Haptic Backhoe

Hydraulic / Electrical System

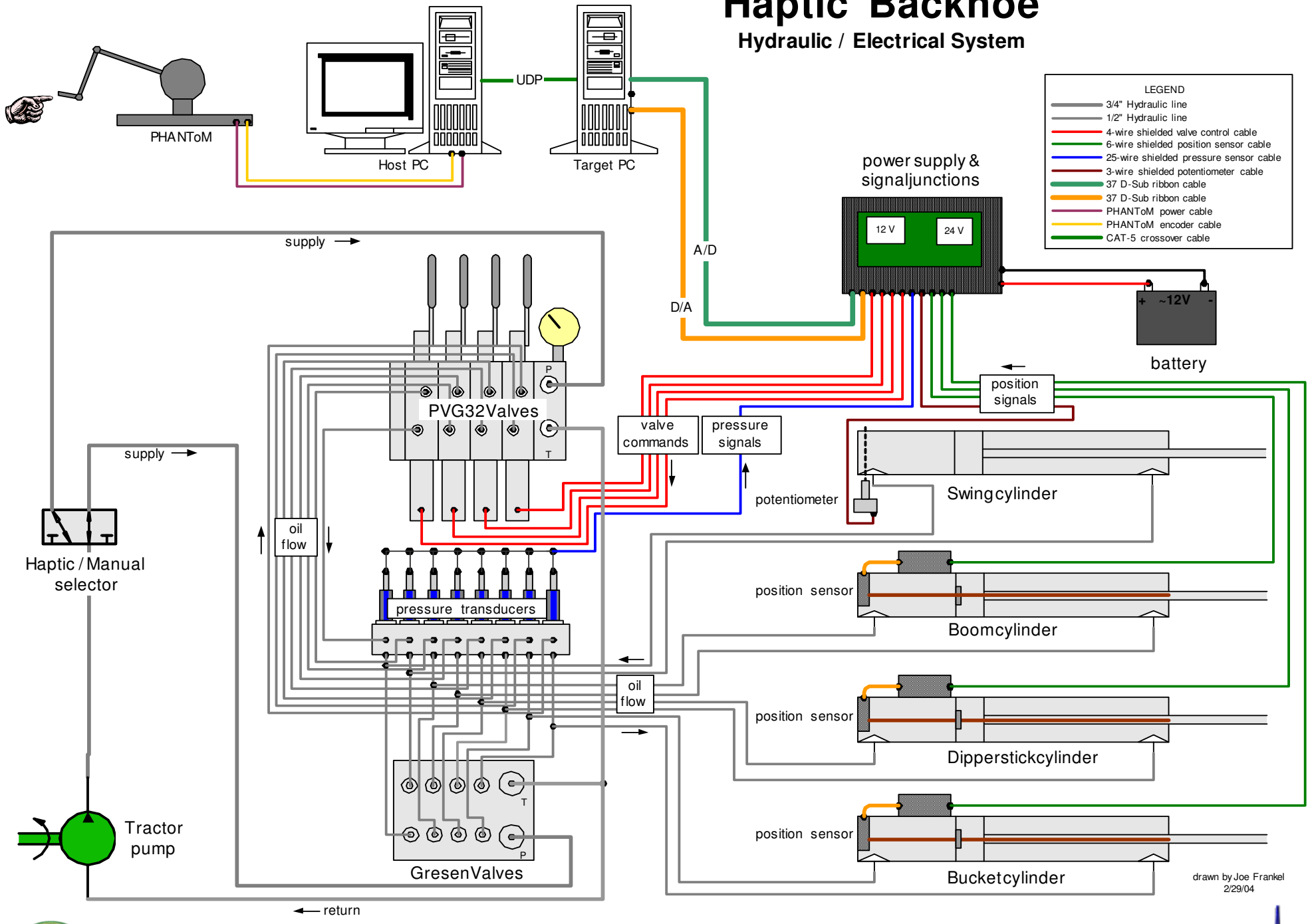

JOHN DEERE

Georgia Tech